COMPONENT DISTRIBUTORS, INC.
Since 1970
www.cdiweb.com

Distributing Tomorrow's Technologies For Today's Designs
Toll-Free: 1-800-777-7334

InvenSense	**ITG-3050 EV Board User Guide**	Document Number: AN-ITG-3050EVB-00 Revision: 1.0 Release Date: 07/25/2011

ITG-3050 3-Axis Evaluation Board User Guide
Revision 1.0

Tel: +1 (408) 988-7339 Fax: +1 (408) 988-8104
Website: http//www.invensense.com
©2011 InvenSense, Inc. All rights reserved.

Component Distributors Inc. (CDI)
Toll-Free: 1-800-777-7334 • E-Mail: sales@cdiweb.com
Web: www.cdiweb.com

COMPONENT DISTRIBUTORS, INC.
Since 1970
www.cdiweb.com

Distributing Tomorrow's Technologies For Today's Designs
Toll-Free: 1-800-777-7334

InvenSense	ITG-3050 EV Board User Guide	Document Number: AN-ITG-3050EVB-00 Revision: 1.0 Release Date: 07/25/2011

CONTENTS

1. REVISION HISTORY 3
2. PURPOSE 4
1. USAGE 4
2. RELATED DOCUMENTS 4
3. ITG-3050 3-AXIS EV BOARD OVERVIEW 5
3. ITG-3050 KEY FUNCTION AND PIN-OUTS 6
4. ITG-3050 BUS CONNECTION 7
4. ITG-3050 3-AXIS EVB SCHEMATICS 7
5. BILL OF MATERIALS 8
6. POWER SUPPLY CONNECTIONS 8
7. ITG-3050 EVB CONNECTOR SIGNALS DESCRIPTION 9
8. CONNECTING THE FSYNC LINE 10
9. SERIAL BUS LEVELS, SPEEDS AND TERMINATIONS 11
5. DATA GATHERING OPTIONS 11
10. CONNECTION TO ARM EVB 11
11. USE OF ITG-3050 WITHOUT ARM EVB BOARD 11
6. SPECIAL INSTRUCTIONS 12
6.1 ELECTROSTATIC DISCHARGE SENSITIVITY 12
7. DIMENSION DRAWING 12

©2011 InvenSense, Inc. All rights reserved.

Component Distributors Inc. (CDI)
Toll-Free: 1-800-777-7334 • E-Mail: sales@cdiweb.com
Web: www.cdiweb.com

InvenSense	**ITG-3050 EV Board User Guide**	Document Number: AN-ITG-3050EVB-00 Revision: 1.0 Release Date: 07/25/2011

1. Revision History

Date	Revision	Description
07/25/2011	1.0	Initial release

©2011 InvenSense, Inc. All rights reserved.

COMPONENT DISTRIBUTORS, INC.
Since 1970
www.cdiweb.com

Distributing Tomorrow's Technologies For Today's Designs
Toll-Free: 1-800-777-7334

2. Purpose

This document describes the hardware and circuitry on the ITG-3050™ 3-Axis Evaluation (EV) Board. It covers applying the EV board to a larger system, understanding key signals and circuit functions, hardware jumper settings, and port connectors.

1. Usage

This evaluation board provides three axes of motion sensing, comprised of:

- X-, Y- and Z-Axis gyros with ±250°/sec, ±500°/sec, ±1000°/sec, ±2000°/sec selectable full-scale range.
- Digital data measured using on-chip ADCs, is transmitted over an I²C interface.

The Evaluation board may be used by itself using an I²C serial communications interface. Alternatively, it may be connected to InvenSense's ARM Evaluation Board (INVARMEVB) for connectivity to a host computer using USB interface.

2. Related Documents

The following documents are recommended for additional information regarding the products and systems described in this Application Note.

- ITG-3050 Product Specification
- ITG-3050 Register Map and Register Descriptions

©2011 InvenSense, Inc. All rights reserved.

Component Distributors Inc. (CDI)
Toll-Free: 1-800-777-7334 • E-Mail: sales@cdiweb.com
Web: www.cdiweb.com

COMPONENT DISTRIBUTORS, INC.
Since 1970
www.cdiweb.com

Distributing Tomorrow's Technologies For Today's Designs
Toll-Free: 1-800-777-7334

3. ITG-3050 3-Axis EV Board Overview

The ITG-3050 3-Axis EV Board contains the ITG-3050 Digital Motion Processing Unit. It contains a number of 'solder-across' jumper points that permit several circuit configurations.

Refer to Figure 1. The EV Board is populated on its top side only for easy of measurement access. The 10x2 customer header connector is designed to connect with the InvenSense ARM Evaluation Board (INVARMEVB), which is a host microcontroller board useful for adapting the ITG-3050 3-Axis EV Board to a personal computer via its USB port.

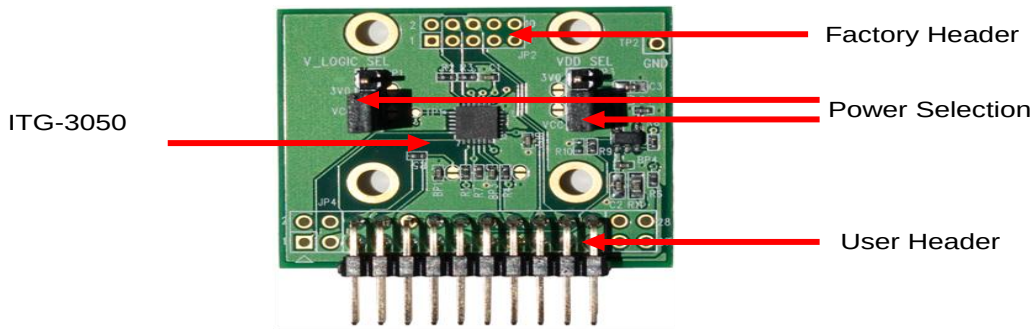

Figure 1. Top side of the ITG-3050 3-Axis EV Board

The 5x2 extension factory header is intended for connecting additional devices to the EV Board, such as a camera image stabilization processor, or a digital-output compass, etc. The 3-pin power selection headers are used to select which voltage supply is fed to the ITG-3050.

©2011 InvenSense, Inc. All rights reserved.

Component Distributors Inc. (CDI)
Toll-Free: 1-800-777-7334 • E-Mail: sales@cdiweb.com
Web: www.cdiweb.com

COMPONENT DISTRIBUTORS, INC.
Since 1970
www.cdiweb.com

Distributing Tomorrow's Technologies For Today's Designs
Toll-Free: 1-800-777-7334

3. ITG-3050 Key Function and Pin-outs

The ITG-3050 EVB is a fully-tested evaluation board, providing for quick evaluation of the ITG-3050's X- , Y- , and Z-axis angular rate gyroscope. The ITG-3050 uses InvenSense's proprietary MEMS technology with vertically driven vibrating masses to produce a functionally complete, low-cost motion sensor. All required conditioning electronics are integrated into a single chip measuring 4 x 4 x 0.9mm. It incorporates X- , Y- and Z-axis low-pass filters and an EEPROM for on-chip factory calibration of the sensor. Factory trimmed scale factors eliminate the need for external active components and end-user calibration. A built-in Proportional-To-Absolute-Temperature (PTAT) sensor provides temperature compensation information. The product is lead-free and Green Compliant.

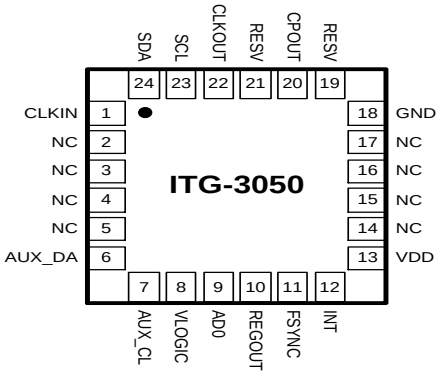

Figure 2. ITG-3050 QFN Package (Top View) 24-pin 4mm x 4mm x 0.9mm

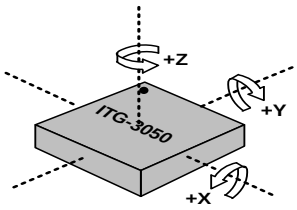

Figure 3. Orientation of Axes of Sensitivity and Polarity of Rotation

©2011 InvenSense, Inc. All rights reserved.

Component Distributors Inc. (CDI)
Toll-Free: 1-800-777-7334 • E-Mail: sales@cdiweb.com
Web: www.cdiweb.com

COMPONENT DISTRIBUTORS, INC.
Since 1970
www.cdiweb.com

Distributing Tomorrow's Technologies For Today's Designs
Toll-Free: 1-800-777-7334

4. ITG-3050 Bus Connection

The ITG-3050 communicates to a system processor using an I^2C serial interface. The device always acts as a slave when communicating to the system processor.

4. ITG-3050 3-Axis EVB Schematics

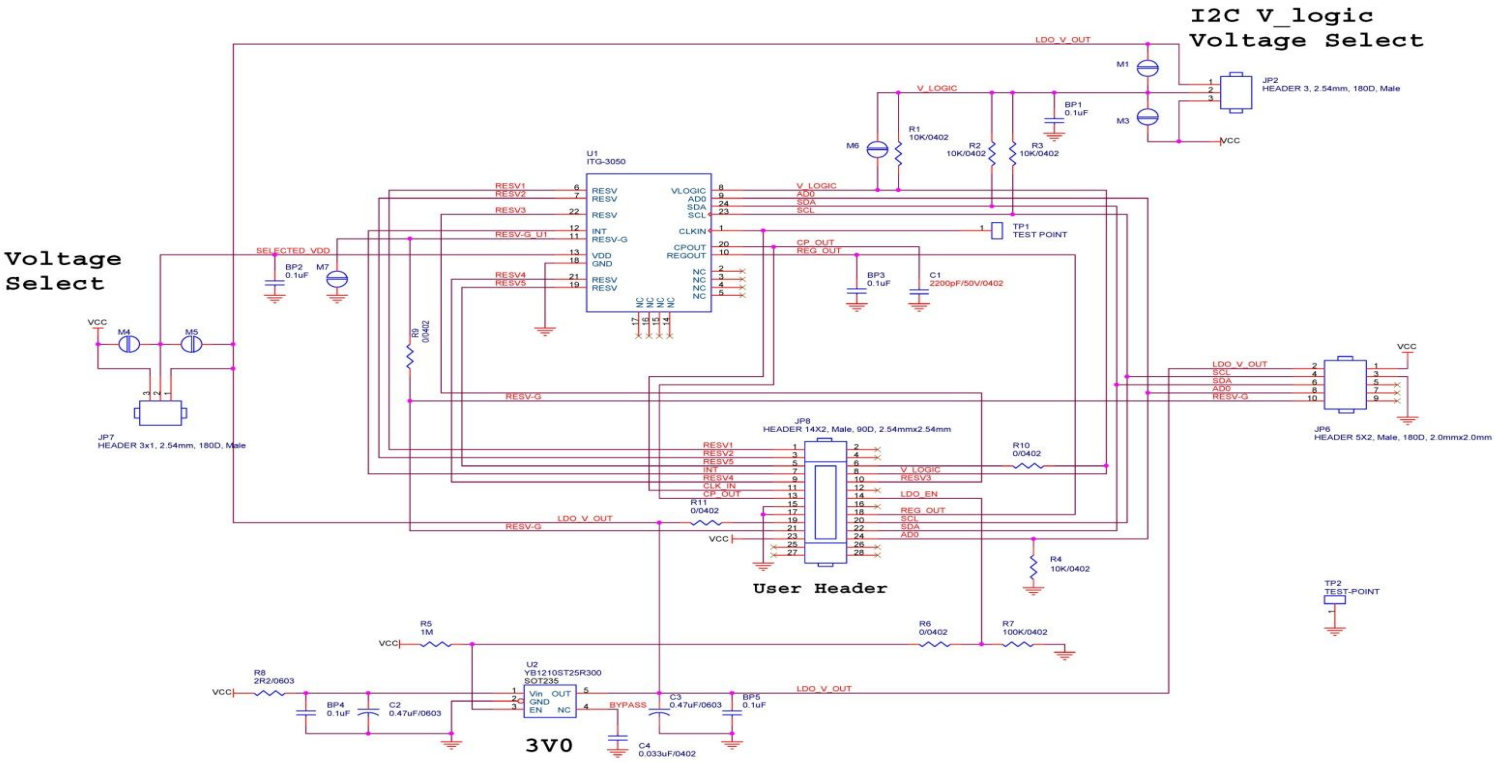

Figure 4. Schematics

©2011 InvenSense, Inc. All rights reserved.

Component Distributors Inc. (CDI)
Toll-Free: 1-800-777-7334 • E-Mail: sales@cdiweb.com
Web: www.cdiweb.com

COMPONENT DISTRIBUTORS, INC.
Since 1970
www.cdiweb.com

Distributing Tomorrow's Technologies For Today's Designs
Toll-Free: 1-800-777-7334

5. Bill of Materials

Table 1. Bill of Materials

Item	Quantity	Reference	Part	PCB Footprint
1	5	BP1,BP2,BP3,BP4,BP5	0.1uF	C0402
2	1	C1	2200pF/50V	C0402
3	2	C2,C3	0.47uF/0603	C0603
4	1	C4	0.033uF	C0402
6	4	JP1,JP3,JP4,JP5	Solder	JP2P1_8X1_3S
7	2	JP2,JP7	HEADER 3, 80mil, 180D, Male	J79\3S
8	1	JP6	HEADER 5X2, Male, 180D, 2.0mmx2.0mm	SIP2X5N2
9	1	JP8	HEADER 14X2, Male, 90D, 2.54mmx2.54mm	HDB2X14NRA
11	2	R4,R1	100K	R0402
12	2	R3,R2	10K	R0402
13	1	R5	1M	R0402
14	1	R8	2R2/0603	R0603
17	1	U1	ITG-3050, 24-Lead QFN (4mm x 4mm x 0.9mm)	QFN5_5S24P0_5T
18	1	U2	YB1210ST25R300	SOT235

6. Power Supply Connections

JP2 and JP7 are 3 header-pin plug-in jumpers which allow users to select between on-board LDO and external DC supply to the ITG-3050. For details, please refer Table 2. Power Selection Jumpers.

The on-board 3.0V LDO (Low-dropout voltage regulator) is a low-noise version with stable enable-disable profile. Its output is called 3V0 on the schematic, and using it will assure that the gyroscope and accelerometer performance will meet intended specifications.

Selecting the raw Vcc line to power the chip is generally done while designing and evaluating an embedded platform, where the host processor and related electronics needs full control over the motion processing chipset's power supply.

When user intends to use on board LDO 3V0 power, external Vcc must be provided with higher than 3.7V to ensure that the LDO works properly.

If user provides Vcc with 5V, JP2 and JP7 must be set as "1-2 short". ITG-3050 VDD and VLOGIC operation range is 2.1V to 3.6V.

©2011 InvenSense, Inc. All rights reserved.

Component Distributors Inc. (CDI)
Toll-Free: 1-800-777-7334 • E-Mail: sales@cdiweb.com
Web: www.cdiweb.com

COMPONENT DISTRIBUTORS, INC.
Since 1970
www.cdiweb.com

Distributing Tomorrow's Technologies For Today's Designs
Toll-Free: 1-800-777-7334

7. ITG-3050 EVB connector signals description

Table 2. Power Selection Jumpers

JP2 Pin Number	Signal description
1-2 short	VLOGIC = 3V
2-3 short	VLOGIC = Vcc (from external)
JP7 Pin Number	Signal description
1-2 short	VDD = 3V
2-3 short	VDD = Vcc (from external)

Table 3. User Interface Connector Signals

JP8 Pin Number	Signal description
1	Reserved
3	Reserved
5	Reserved
7	INT, INT output to controller
9	Reserved
11	CLK_I
13	CPOUT
15	GND
17	GND
19	3V
21	FSYNC
23	Receive power from ARM-7 Controller Board or external. It should be 5V, with >200mA
25	NC
27	NC
2	NC
4	NC
6	NC
8	VLOGIC
10	Reserved
12	NC

©2011 InvenSense, Inc. All rights reserved.

Component Distributors Inc. (CDI)
Toll-Free: 1-800-777-7334 • E-Mail: sales@cdiweb.com
Web: www.cdiweb.com

COMPONENT DISTRIBUTORS, INC.
Since 1970
www.cdiweb.com

Distributing Tomorrow's Technologies For Today's Designs
Toll-Free: 1-800-777-7334

JP8 Pin Number	Signal description
14	EVB on board LDO enable
16	NC
18	REGOUT
20	I²C SCL
22	I²C SDA
24	I²C Addr
26	NC
28	NC

Table 4. Extended Factory Connector

JP6 Pin Number	Signal description
1	VCC, power from ARM-7 controller board or external power. It should be 5V, with >200mA
3	GND
5	NC
7	NC
9	NC
2	3V
4	I²C SCL
6	I²C SDA
8	I²C Addr
10	FSYNC

8. Connecting the FSYNC Line

The FSYNC line is intended for use in a camera's image-stabilization system. It is an input from the camera platform to the EV Board, and is intended to synchronize the ITG-3050's serial bus transfer with the master timing set by the camera system. FSYNC can originate from the host processor via JP8 pin-21, or from JP6 pin-10. There is no external pull-up termination for the FSYNC line.

©2011 InvenSense, Inc. All rights reserved.

Component Distributors Inc. (CDI)
Toll-Free: 1-800-777-7334 • E-Mail: sales@cdiweb.com
Web: www.cdiweb.com

COMPONENT DISTRIBUTORS, INC.
Since 1970
www.cdiweb.com

Distributing Tomorrow's Technologies For Today's Designs
Toll-Free: 1-800-777-7334

9. Serial bus Levels, Speeds and Terminations

The ITG-3050 supports I²C up to 400kHz serial clock rate. The I²C bus open drain pull up resisters are connected to either 3.0V or external provided Vcc (3V or 5V depend on user). The pull up level is selected by JP2. Please refer to Table 2. Power Selection Jumpers.

5. Data Gathering Options

The ITG-3050's Digital Sensor Data is available at the User Header. Alternatively, for connectivity with a host PC, an InvenSense ARM Processor Board may be used.

10. Connection to ARM EVB

For communications via USB to a host computer, the ITG-3050 EVB can be connected to InvenSense's ARM processor board, the INV-ARMEVB.

The photo below shows the connection of ITG-3050 to INV-ARMEVB. Connection between the two boards is made via the user header.

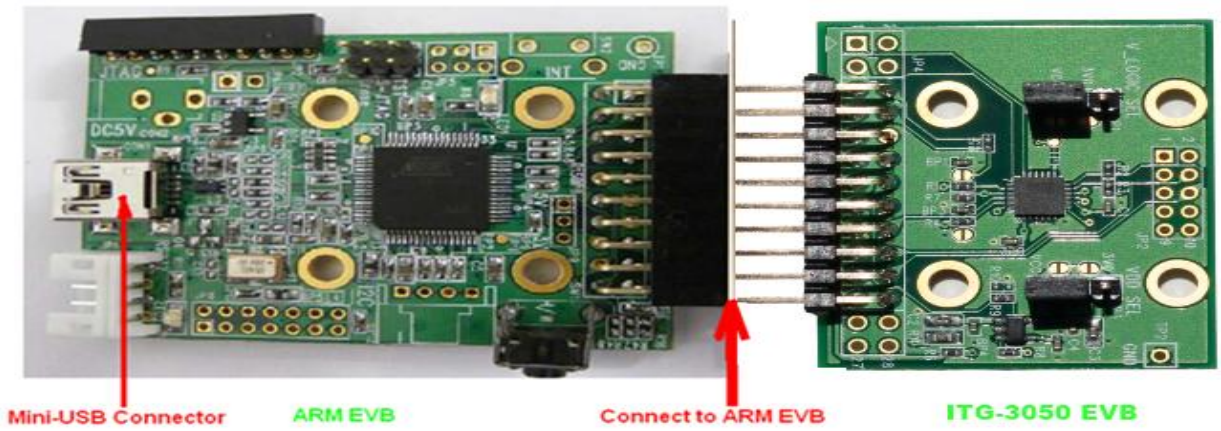

Figure 5. Connect ITG-3050 EVB to ARM Board

11. Use of ITG-3050 without ARM EVB board

I²C signals are available on JP8 and JP6. User can develop tools to communicate with the ITG-3050. There is no bus mode selection setting needed.

©2011 InvenSense, Inc. All rights reserved.

Component Distributors Inc. (CDI)
Toll-Free: 1-800-777-7334 • E-Mail: sales@cdiweb.com
Web: www.cdiweb.com

6. Special Instructions

6.1 Electrostatic Discharge Sensitivity

The ITG-3050 gyro can be permanently damaged by an electrostatic discharge. ESD precautions for handling and storage are recommended.

7. Dimension Drawing

The ITG-3050 EV board is a 4 layer PCB with 32mm x 38mm dimension.

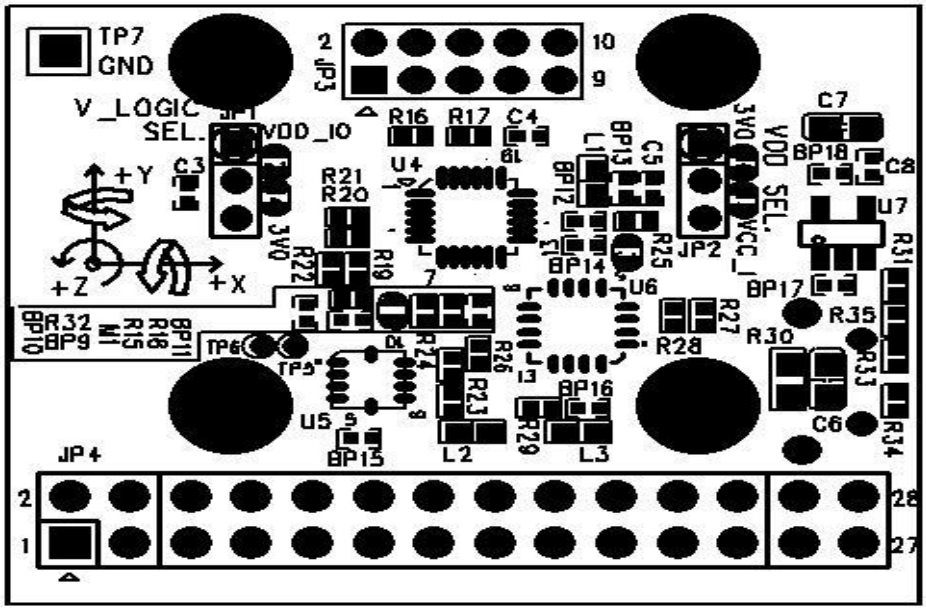

Figure 6. ITG-3050 EVB Dimensions

©2011 InvenSense, Inc. All rights reserved.

COMPONENT DISTRIBUTORS, INC.
Since 1970
www.cdiweb.com

Distributing Tomorrow's Technologies For Today's Designs
Toll-Free: 1-800-777-7334

InvenSense	**ITG-3050 EV Board User Guide**	Document Number: AN-ITG-3050EVB-00 Revision: 1.0 Release Date: 07/25/2011

This information furnished by InvenSense is believed to be accurate and reliable. However, no responsibility is assumed by InvenSense for its use, or for any infringements of patents or other rights of third parties that may result from its use. Specifications are subject to change without notice. InvenSense reserves the right to make changes to this product, including its circuits and software, in order to improve its design and/or performance, without prior notice. InvenSense makes no warranties, neither expressed nor implied, regarding the information and specifications contained in this document. InvenSense assumes no responsibility for any claims or damages arising from information contained in this document, or from the use of products and services detailed therein. This includes, but is not limited to, claims or damages based on the infringement of patents, copyrights, mask work and/or other intellectual property rights.

Certain intellectual property owned by InvenSense and described in this document is patent protected. No license is granted by implication or otherwise under any patent or patent rights of InvenSense. This publication supersedes and replaces all information previously supplied. Trademarks that are registered trademarks are the property of their respective companies. InvenSense sensors should not be used or sold in the development, storage, production or utilization of any conventional or mass-destructive weapons or for any other weapons or life threatening applications, as well as in any other life critical applications such as medical equipment, transportation, aerospace and nuclear instruments, undersea equipment, power plant equipment, disaster prevention and crime prevention equipment.

InvenSense® is a registered trademark of InvenSense, Inc. ITG-3050™ is a trademarks of InvenSense, Inc.

©2011 InvenSense, Inc. All rights reserved.

Component Distributors Inc. (CDI)
Toll-Free: 1-800-777-7334 • E-Mail: sales@cdiweb.com
Web: www.cdiweb.com