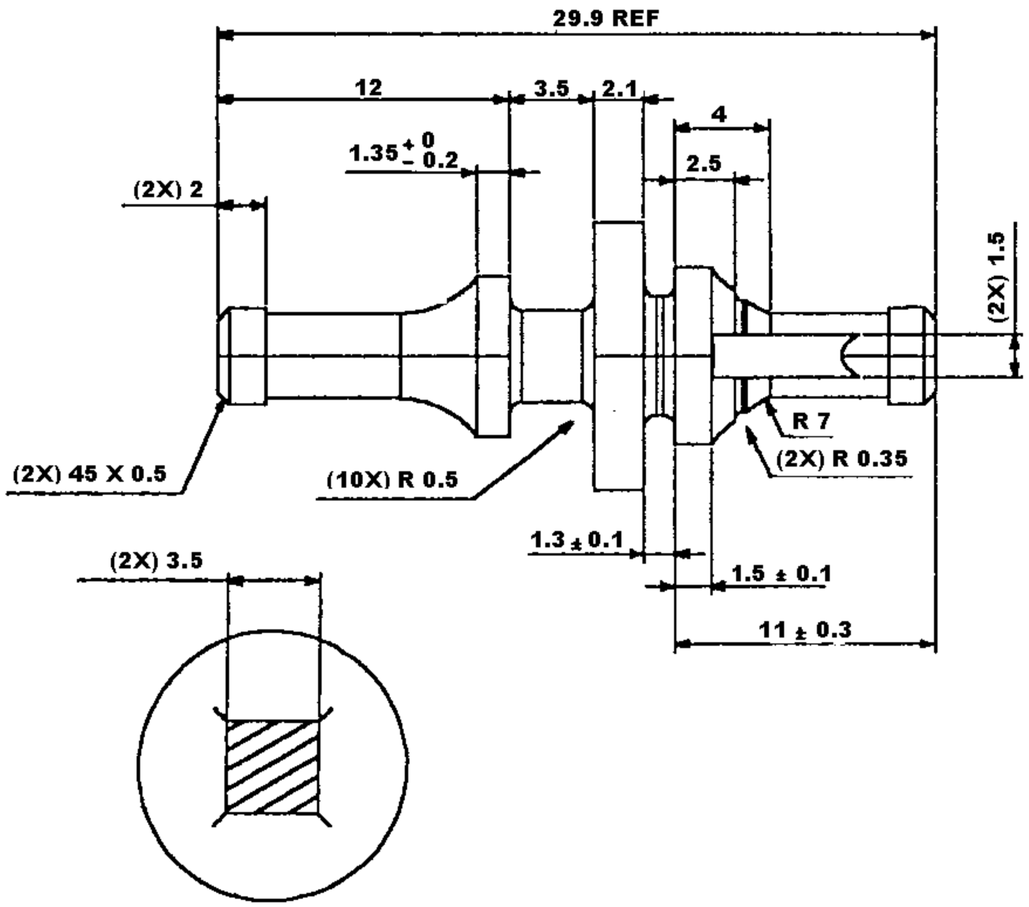

SECTION : A-A
SCALE 10:1

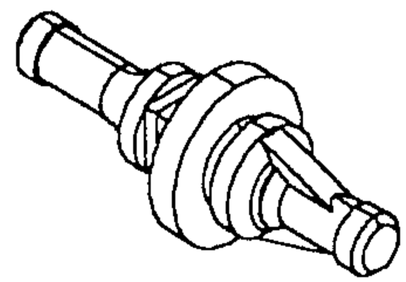

NOTES

1. MATERIAL TO BE ASTM D-2000 TYPE M3BA407 B13C12Z.

2. SUFFIX Z: MATERIAL TO HAVE A BASHORE RESILIENCE OF 15% ±4% AND A 35 ±5 DUROMETER A.

3. WARNING: THIS MANFACTURING PROCESS MAY INCLUDE HAZARDOUS OPERATIONS AND REQUIRE SPECIAL HEALTH AND/OR SAFETY PRECAUTIONS.

4. SUGGESTED RUBBER FORMULA:

EXXON BUTYL 268	80.0
DUPONT NORDEL 1070	20.0
STEARIC ACID	1.0
HAF BLACK	20.0
SUNPAR 2280	20.0
ZINC OXIDE	5.0
SULFER	1.0
MBTS	0.5
TMTDS	2.0

CURE @166°C FOR 20 MINUTES

5. 0.15 mm MAX MISMATCH PERMISSIBLE ON PARTING LINE. 2° DRAFT PERMISSIBLE.

6. APPLICATION: FOR USE IN MOUNTING FANS WITH Ø4.3 ±0.3mm HOLES AND FLANGE 3 TO 5.5mm THICK. SUPPORT MOUNTING TO BE Ø4.9 ±0.15mm AND 1 TO 2mm THICKNESS.

7. PARTS TO BE DIP COATED WITH A METHYL SILICONE WATER BASED EMULSION. THE EMULSION CAN BE OBTAINED FROM UNION CARBIDE CORP., SO. CHARLESTON, WV. PRODUCT NO. LE-46 EMULSION.

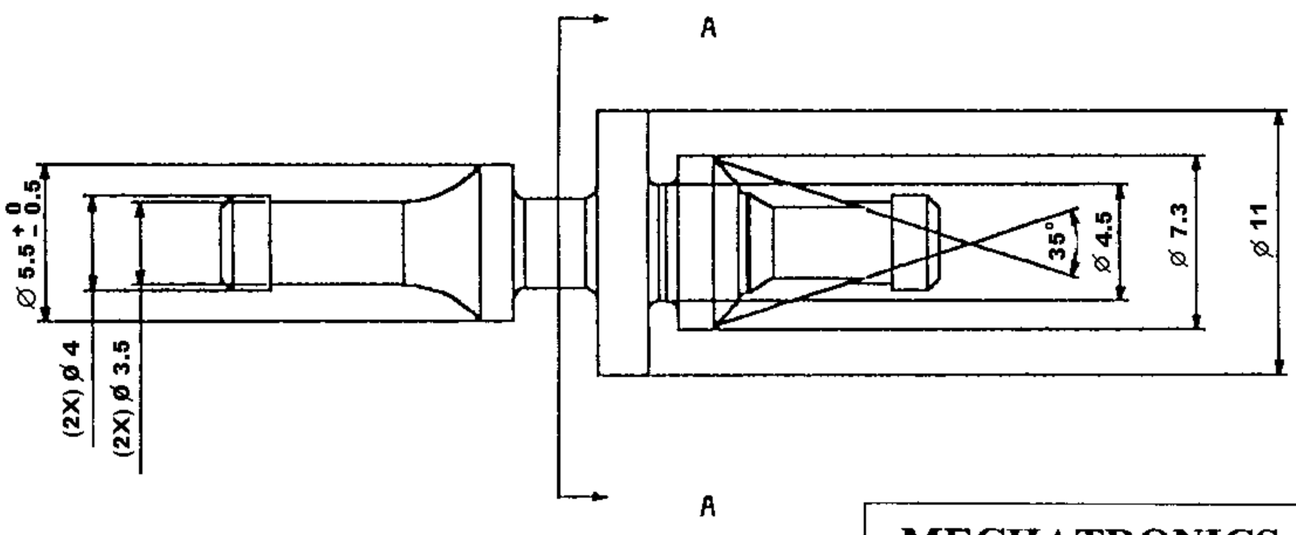

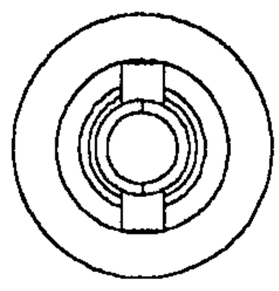

MECHATRONICS, INC.	
PART NUMBER: VI-1	**DESCRIPTION: VIBRATION ISOLATOR**