REV	ECN	DESCRIPTION	DATE	APPROVED
01		SKETCH	94	K. RYAN

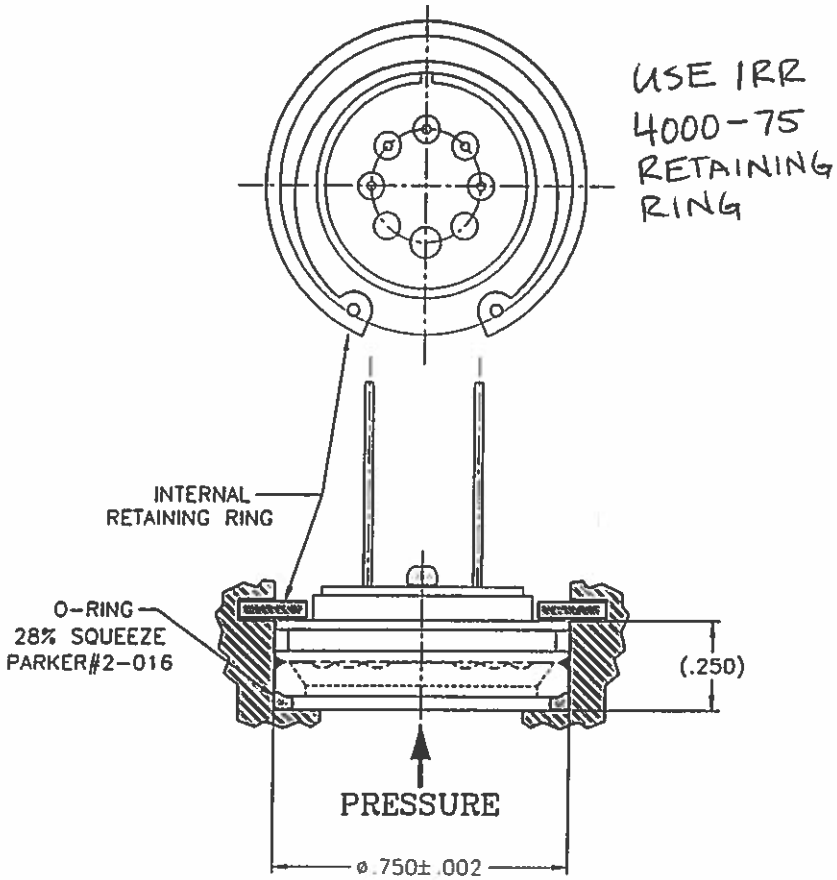

FACE SEAL
NPI-19A SUGGESTED INSTALLATION

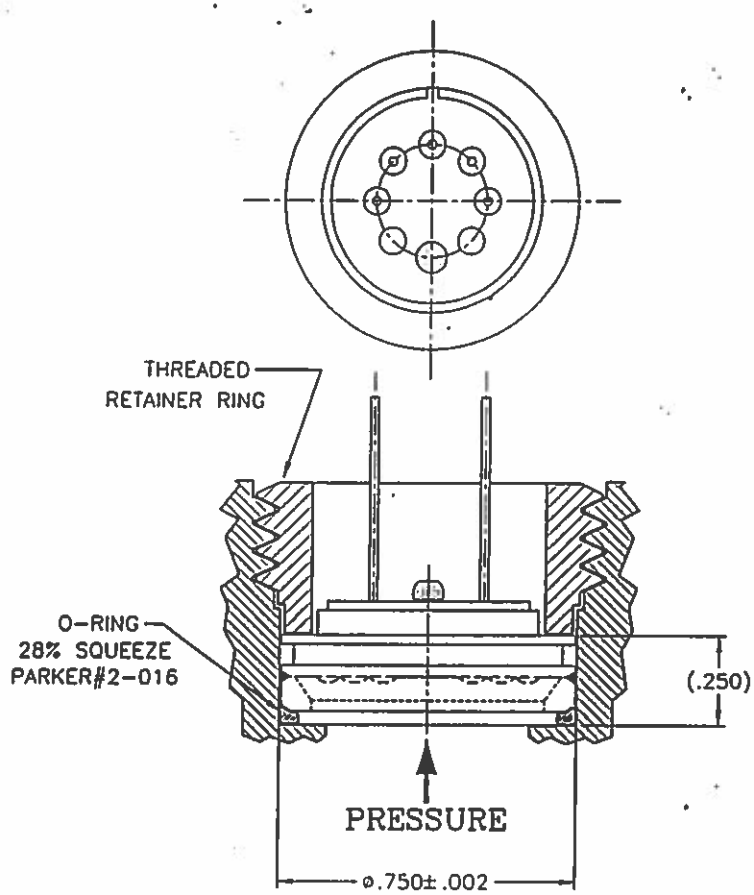

FACE SEAL
NPI-19A SUGGESTED INSTALLATION

THIS DOCUMENT AND DATA DISCLOSED HEREIN OR HEREWITH IS THE PROPERTY OF [redacted] NOVASENSOR AND IS NOT TO BE REPRODUCED, USED, OR DISCLOSED IN WHOLE OR IN PART TO ANYONE WITHOUT THE WRITTEN PERMISSION OF [redacted] NOVASENSOR.

CUSTOMER
NEXT ASSY | USED ON
APPLICATION
THIRD ANGLE PROJECTION

• UNLESS OTHERWISE SPECIFIED INTERPRET GEOMETRIC TOL PER ASME Y14.5M-1982.
• UNLESS OTHERWISE SPECIFIED, ALL DIMENSIONS ARE IN: INCHES

INCHES	METRIC
FRACTIONS	
DECIMALS .X ±	0.X ±
.XX ± N/A	0.XX ±
.XXX ± N/A	
ANGLES	N/A
MATERIAL	FINISH

DO NOT SCALE DRAWING

CONTRACT NO.

APPROVALS	DATE
DRAWN A.GUITTARD	8.08.94
CHECKED	
ISSUED	

PARTS LIST

NovaSensor
1055 Mission Court
Fremont, Ca 94539-4717

NPI-19A MOUNTING CONCEPT

SIZE C | CAGE CODE | DWG. NO. | REV 01
SCALE NONE | SHEET 1 OF 1