SGX Europe Sp. z o.o.
Building 11
Ligocka St. 103,
40-568 Katowice,
Poland

T: +48 (0) 32 438 4778

E: sales.is@sgxsensortech.com
www.sgxsensortech.com

Oxygen SGX Sensortech Circuit

Solid Polymer Technology

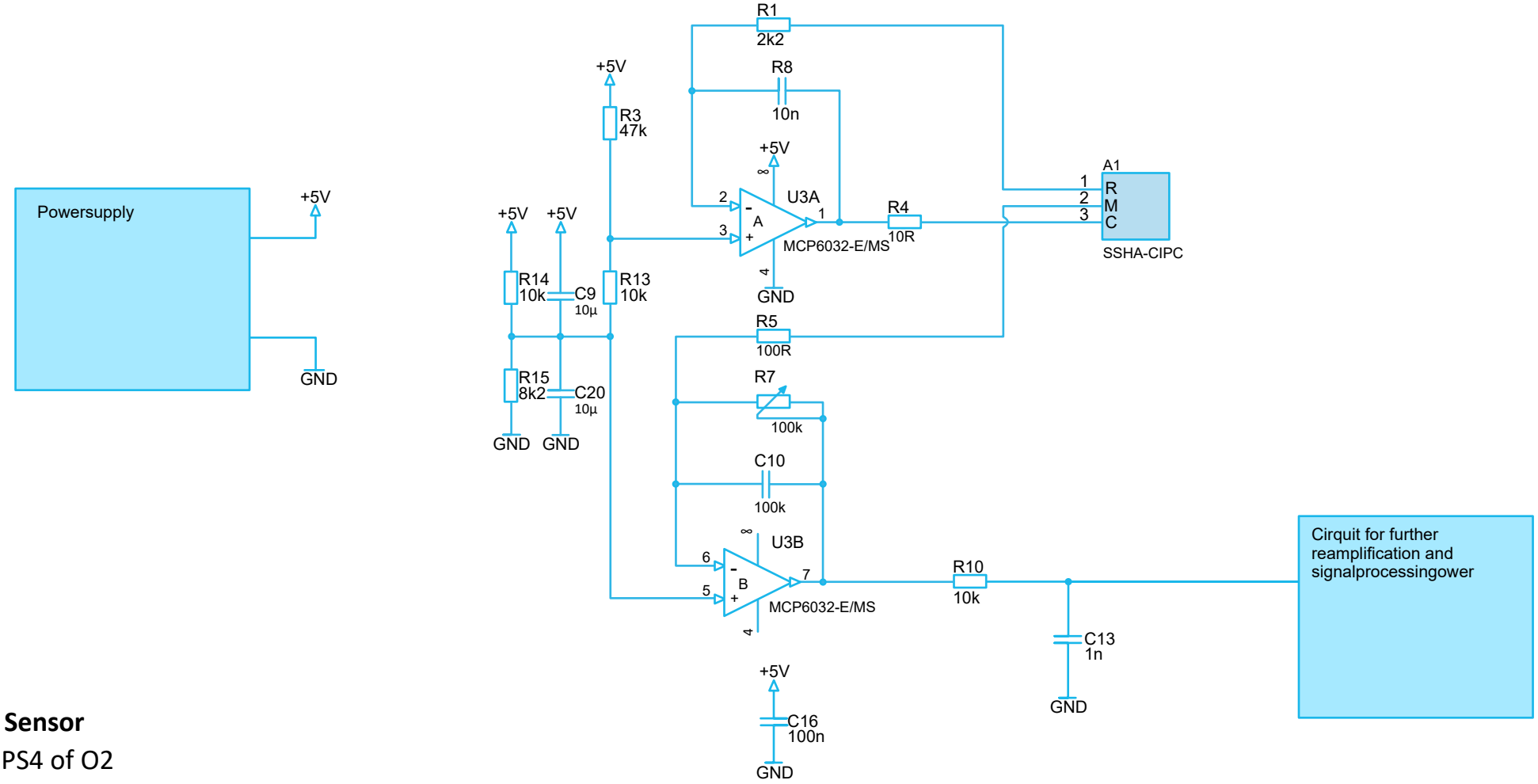

Adapt Sensor

PS1 & PS4 of O2

3 electrode Oxygen sensor with Bias voltage -400 ~ -600mv

© SGX Sensortech 2012-2022